COLECRAFT
Commercial Furnishings

Sit-Stand Collaboration Station

For use with ultra short throw projector
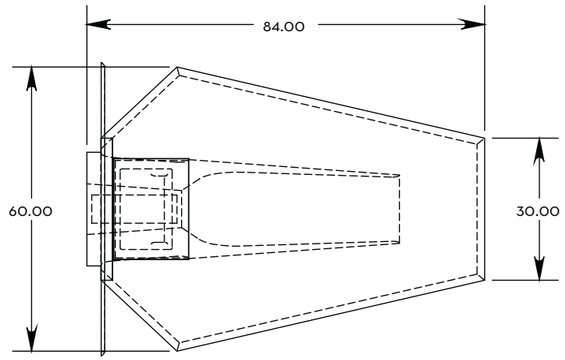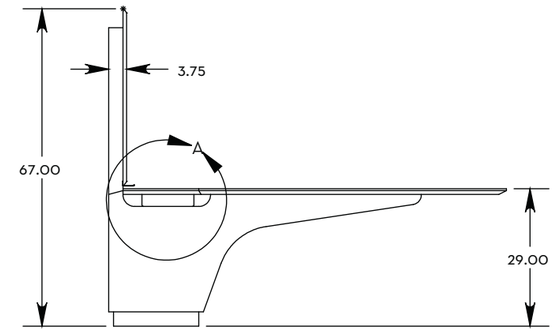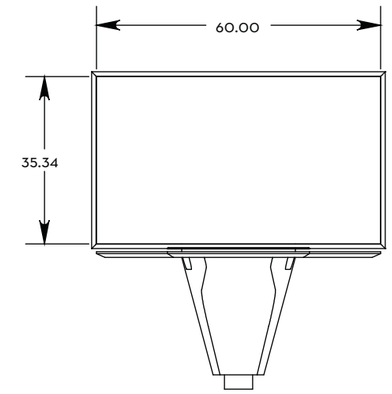
A recent study found that no matter how much you exercise, sitting for excessively long periods of time is a risk factor for early death.
Link to full article
https://www.cnn.com/2018/11/20/health/sitting-study-cdc/index.html